Dyana

96261125 <DYANA LED 24L70 NR 740 CL2 MLE60

IP66 | IK10

Dyana

A high quality LED luminaire with Narrow Road light distribution and Electronic, Programmable control gear. Body, canopy and spigot: die-cast aluminium, textured anthracite finish. Enclosure: 5mm thick, toughened glass. Class II electrical, IP66. Supplied, ready to install, in a single box. Complete with 4000K LED

Mounting: Ø60mm side entry with 0° tilt. Adjustable to -5° tilt or post-top with 5° or 10° tilt.

Dimensions: 685 x 511 x 92 mm
Luminaire input power: 52 W
Weight: 10.84 kg
Scx: 0.03 m²

TLG_DYNA_F_1MLEDPDB_1_14.jpg

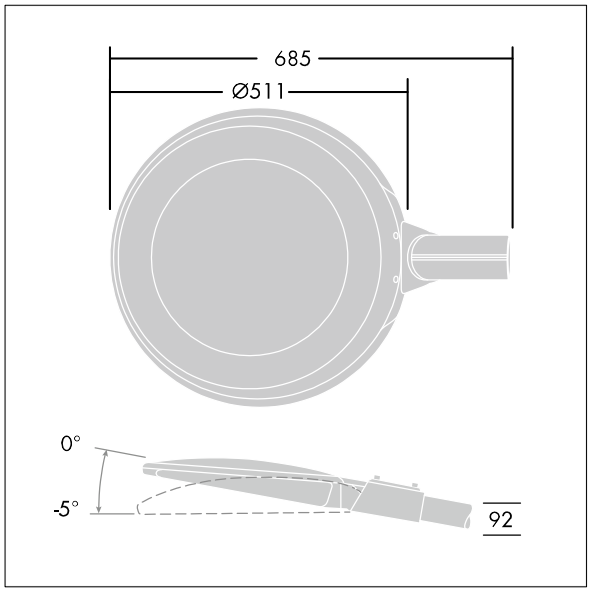

TLG_DYNA_M_LED MLE.wmf

This product contains a light source of energy efficiency class D.

All values marked with an * are rated values. Thorn uses tried and tested components from leading suppliers, however there may be isolated instances of technology-related failures of individual LEDs during the rated product lifetime. International standards set the tolerance in initial flux and connected load at ±10%. Unless stated otherwise, the values apply to an ambient temperature of 25°C.

Thorn Lighting is constantly developing and improving its products. The right is reserved to change specifications without prior notification or public announcement.
© Thorn Lighting