Thor Bollard

96264226 TR B S 10L25 740 ASY CL1 MPL

ISO 9223 C5	IP66	IK10							T_a25	T_a50

Thor Bollard

An elegant vandal resistant asymmetrical slim bollard with high performance optic. For Electronic, fixed output control gear. IP66 Electrical Class I. Column and Base: aluminium (EW AW 6060). Canopy: die-cast aluminium (EN AC 44300). Diffuser: Clear anti UV polycarbonate. Gear Box: polycarbonate. Canopy and Column colour: powder coated anthracite (close to RAL7043) (close to RAL7043). Ready to install prewired luminaire. Connection box required, to be ordered separately. Complete with 4000K LED

Flange mounting: 4 x anchor bolts M14 (to be ordered separately), spacing: 150mm

Dimensions: 160 x 160 x 1017 mm
Luminaire input power: 8.9 W
Weight: 7.66 kg

TLG_ADLB_F_SLIM.jpg

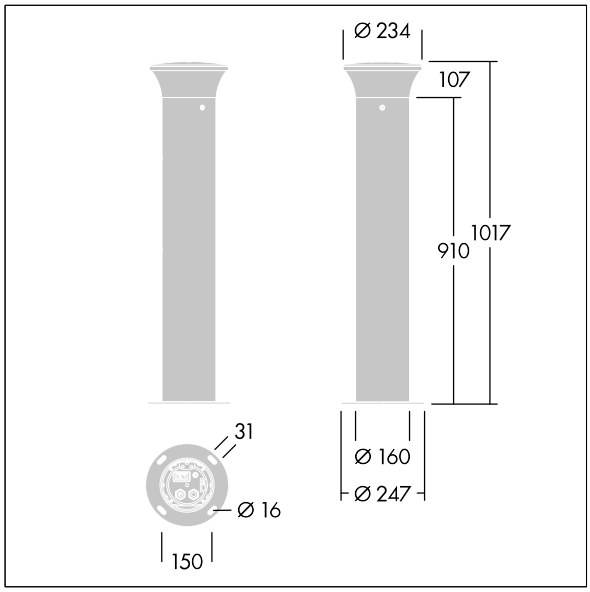

TLG_ADLB_M_SLIM_without_access_door.wmf

This product contains a light source of energy efficiency class D.

All values marked with an * are rated values. Thorn uses tried and tested components from leading suppliers, however there may be isolated instances of technology-related failures of individual LEDs during the rated product lifetime. International standards set the tolerance in initial flux and connected load at ±10%. Unless stated otherwise, the values apply to an ambient temperature of 25°C.

Thorn Lighting is constantly developing and improving its products. The right is reserved to change specifications without prior notification or public announcement.
© Thorn Lighting

Thor Bollard

96264226 TR B S 10L25 740 ASY CL1 MPL

Thorn Lighting is constantly developing and improving its products. The right is reserved to change specifications without prior notification or public announcement.
© Thorn Lighting