# Areaflood Pro

## 96644939 <AFP M 72L35-740 A4 BS 3550 CL2 GY

| | | | | | | | | | | | | |
|---|---|---|---|---|---|---|---|---|---|---|---|---|
| CB Certificate | ISO 9223 C5 | | IP66 | | IK08 | | CE | | | | Ta -25 +35 | |

## Areaflood Pro

A compact, lightweight, general purpose LED area floodlight. With medium body. LED converter configured for power reduction, effective 3 hours before and 5 hours after a calculated midnight, driving 72 LEDs at 350mA with asymmetrical 40° light distribution. IP66, IK08, Class II electrical. Body: die-cast aluminium,  Light grey 150 sanded textured (close to RAL9006).. Enclosure: mm thick toughened glass. Reversable mounting stirrup supplied, Complete with 4000K LED.

Not compatible with UrbaSens systems.

Dimensions: 458 x 490 x 139 mm
Luminaire input power: 75 W
Luminaire luminous flux: 12784 lm
Luminaire efficacy: 170 lm/W
weight: 13.77 kg
Scx: 0.064 m²

TLG_AFLP_F_MEDIUMPDB.jpg

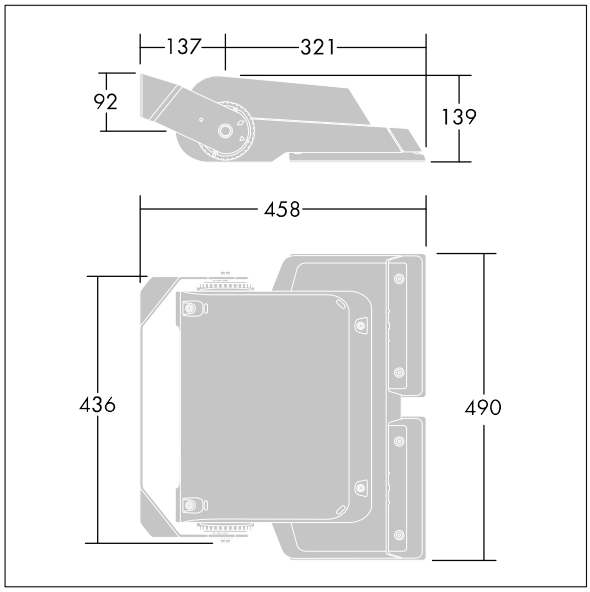


TLG_AFLP_M_MED.wmf

This product contains light sources of energy efficiency class E.

All values marked with an * are rated values. Thorn uses tried and tested components from leading suppliers, however there may be isolated instances of technology-related failures of individual LEDs during the rated product lifetime.  International standards set the tolerance in initial flux and connected load at ±10%. Unless stated otherwise, the values apply to an ambient temperature of 25°C.

Thorn Lighting is constantly developing and improving its products. The right is reserved to change specifications without prior notification or public announcement.
© Thorn Lighting