Areaflood Pro

96645103 <AFP L 96L70-740 A6 HFX CL1 GY

ISO 9223 C5 | IP66 | IK08 | Ta -25 +35

Areaflood Pro

A compact, lightweight, general purpose LED area floodlight. With large body. LED converter configured for DALI control over additional wires, driving 96 LEDs at 700mA with asymmetrical 60° light distribution. IP66, IK08, Class I electrical. Body: die-cast aluminium (EN AC-44300), Light grey 150 sanded textured (close to RAL9006).. Enclosure: mm thick toughened glass. Reversable mounting stirrup supplied, Complete with 4000K LED.

TLG_AFLP_F_LARGEPDB.jpg

Dimensions: 658 x 490 x 139 mm
Luminaire input power: 201 W
Luminaire luminous flux: 30587 lm
Luminaire efficacy: 152 lm/W
weight: 18.4 kg
Scx: 0.073 m²

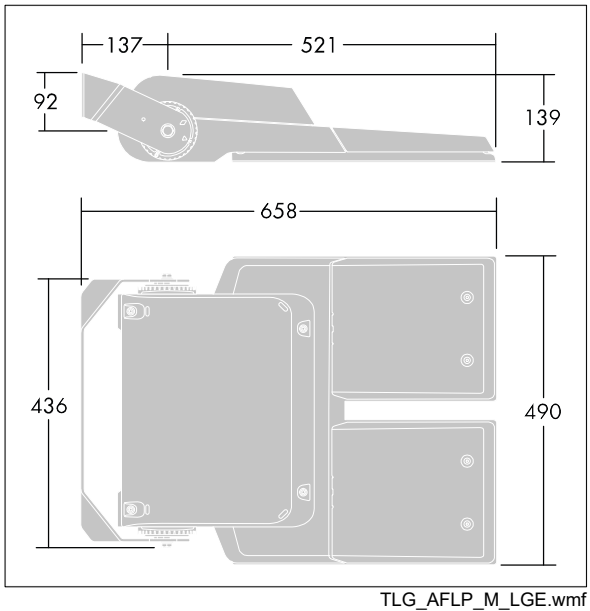

TLG_AFLP_M_LGE.wmf

This product contains light sources of energy efficiency class D.

All values marked with an * are rated values. Thorn uses tried and tested components from leading suppliers, however there may be isolated instances of technology-related failures of individual LEDs during the rated product lifetime. International standards set the tolerance in initial flux and connected load at ±10%. Unless stated otherwise, the values apply to an ambient temperature of 25°C.

Thorn Lighting is constantly developing and improving its products. The right is reserved to change specifications without prior notification or public announcement.
© Thorn Lighting