R2L2

96274644 R2L2 M 96L90 740 EWC CL2 GY

ISO 9223 C5 | IP66 | IK08 | T_a25

R2L2

A medium size LED road lighting lantern with 96 LEDs driven at 900mA with Extra Wide Street & Comfort optic. LED driver Programmable. Class II electrical, IP66, IK08. Housing: die-cast aluminium, powder coated textured light grey. Enclosure: tempered flat glass. Screws: stainless steel, Ecolubric® treated. Post top (Ø60/76mm, tilted 0°/5°/10°) or lateral (Ø34/42/49/60mm, tilted 0°/-5°/-10°/-15°) mounting. For lateral mounting to Ø34/42mm spigots an adaptor (59005840 R2L2 MA34/42 NPA) should be ordered separately. Complete with 4000K LED.

Dimensions: 880 x 370 x 155 mm
Luminaire input power: 262 W
Luminaire luminous flux: 35012 lm
Luminaire efficacy: 134 lm/W
Weight: 14.3 kg
Scx: 0.06 m²

TLG_R2L2_F_MPDB.jpg

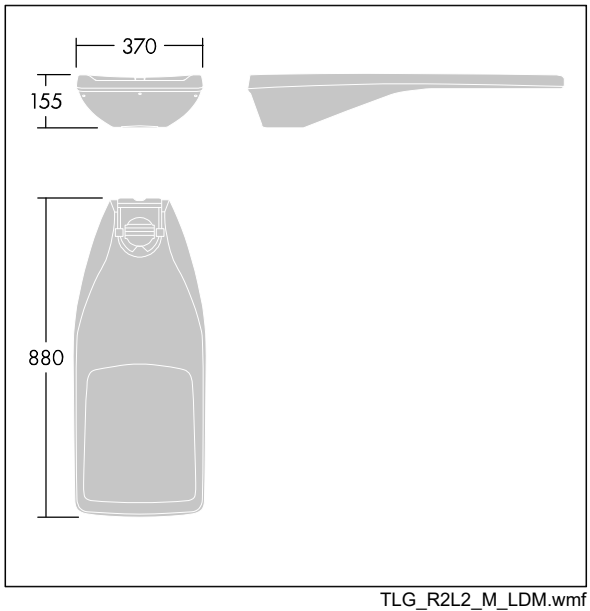

TLG_R2L2_M_LDM.wmf

This product contains light sources of energy efficiency classes D, E.

All values marked with an * are rated values. Thorn uses tried and tested components from leading suppliers, however there may be isolated instances of technology-related failures of individual LEDs during the rated product lifetime. International standards set the tolerance in initial flux and connected load at ±10%. Unless stated otherwise, the values apply to an ambient temperature of 25°C.

Thorn Lighting is constantly developing and improving its products. The right is reserved to change specifications without prior notification or public announcement.
© Thorn Lighting