Victor

96276877 VIC2 72L50-740 NR BP 3550 HFX CL2 ->

IP66 | IK08

Victor

A large size LED road and street luminaire, in a modern and timeless design. 72 LEDs driven at 500mA with Narrow Road optic. DALI dimmable LED driver. Class II electrical, IP66. Body in aluminium, powder coated Traffic white RAL9016. Enclosure: toughened flat glass. Luminaire to be suspended using brackets (Ø27G), post top, or wall mounted. Tool-free electrical connection via 2 x 2.5 mm² terminal block. Equipped with 50% power reduction circuit, effective 3 hours before and 5 hours after a calculated midnight. Pre-wired with 10m, 4 core cable. Complete with 4000K LED

Dimensions: Ø503 x 360 mm
Luminaire input power: 109 W
Weight: 9.7 kg
Scx: 0.144 m²

TLG_VCTR_F_65PDB.jpg

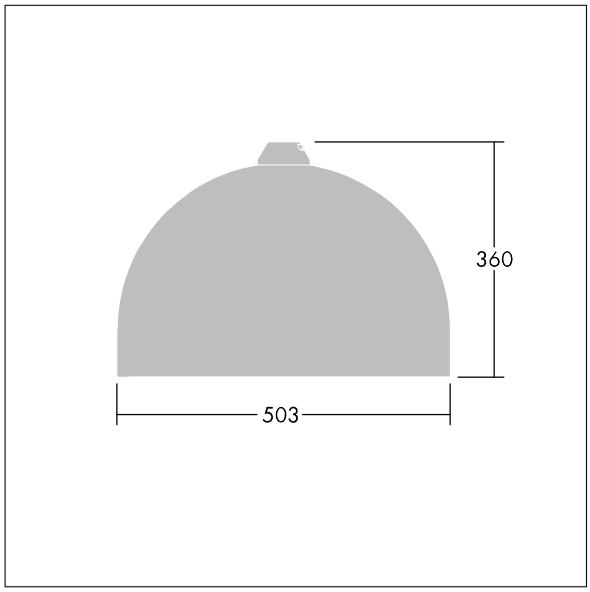

TLG_VCTR_M_SWLD2.wmf

This product contains a light source of energy efficiency class D.

All values marked with an * are rated values. Thorn uses tried and tested components from leading suppliers, however there may be isolated instances of technology-related failures of individual LEDs during the rated product lifetime. International standards set the tolerance in initial flux and connected load at ±10%. Unless stated otherwise, the values apply to an ambient temperature of 25°C.

Thorn Lighting is constantly developing and improving its products. The right is reserved to change specifications without prior notification or public announcement.
© Thorn Lighting