THORN

96632607 <ORUS 1L70-840 BPS CL2 MFX RD-WB GY

ISO 9223 C3	IP66	IK10						

An innovative LED Bracket mounted mounted low level road lighting lantern incorporating Flat Beam® technology. 1 LED driven at 700mA. Equipped with 50% power reduction circuit, effective 3 hours before and 5 hours after a calculated midnight. It can be deactivated at installation with an easily accessible internal switch. Road optic, with baffle, reaching lighting standards at 0.9m mounting height. IP66, IK10, Class II electrical. Housing: die-cast aluminium, powder coated textured light grey 150 (close to RAL9006) (close to RAL9006). Enclosure: UV stabilised polycarbonate protected against graffiti and with extra scratch resistant treatment. Fixings: stainless steel, Ecolubric® treated. Complete with 4000K LED.

Due to the unique calculation requirements of this product the photometric data is not provided here but design advice may be obtained from your local representative.

Dimensions: 540 x 463 x 193 mm
Weight: 9.2 kg
Luminaire input power: 30 W

TLG_ORUS_F_LEDMFXPDB.jpg

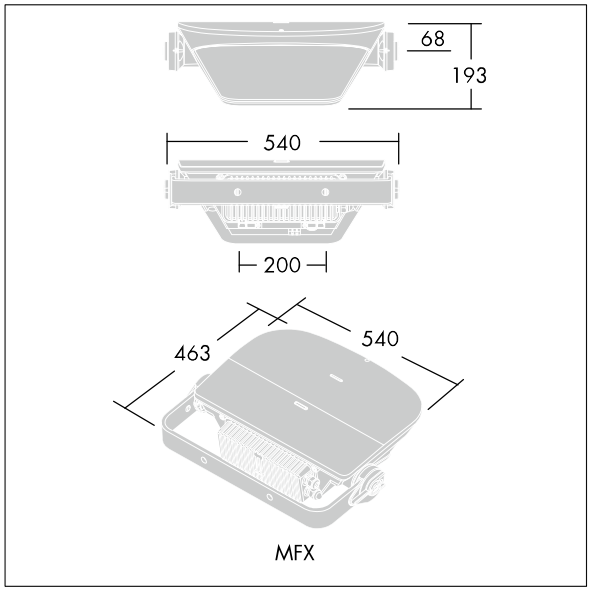

TLG_ORUS_M_LD1c.wmf

This product contains a light source of energy efficiency class D.

All values marked with an * are rated values. Thorn uses tried and tested components from leading suppliers, however there may be isolated instances of technology-related failures of individual LEDs during the rated product lifetime. International standards set the tolerance in initial flux and connected load at ±10%. Unless stated otherwise, the values apply to an ambient temperature of 25°C.

Thorn Lighting is constantly developing and improving its products. The right is reserved to change specifications without prior notification or public announcement.
© Thorn Lighting